REV.	DESCRIPTION	DATE	DRAFTER	APPROVER
A1	DWG.REL	2020.05.27	DENG	JIN

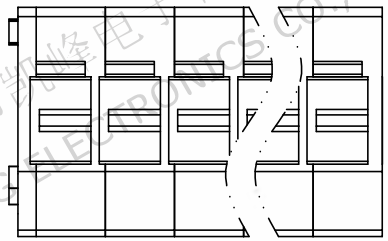

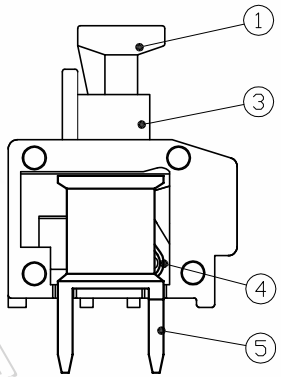

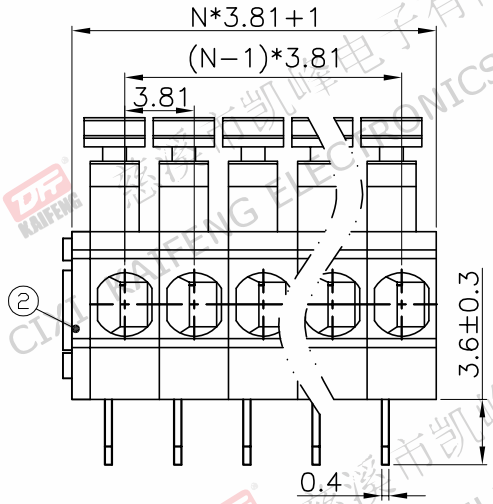

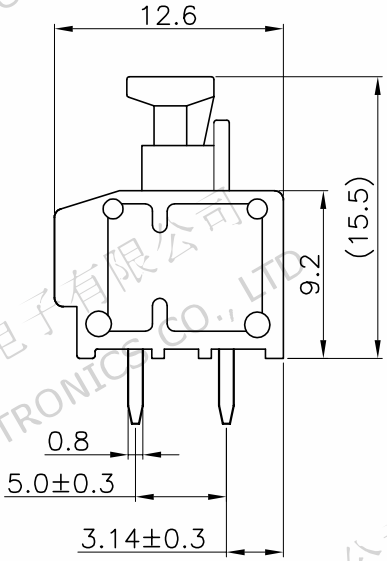

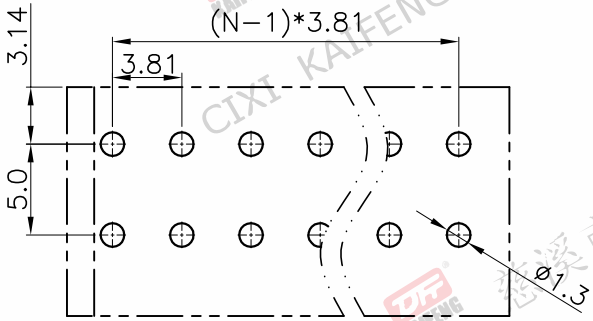

P.C.B.LAYOUT

- Material
  - ①Button : PA66, UL94V−0
  - ②Cover : PA66, UL94V−0
  - ③Housing : PA66, UL94V−0
  - ④Reed : Stainless steel
  - ⑤Pin header : Copper alloy, Tin plated
- Electrical

	UL	IEC
Rated voltage :	300V	250V
Rated current :	5A	10A

  - Contact resistance : 20mΩ(Max)
  - Insulation resistance: 500MΩ/DC500V
  - Withstanding Voltage : AC2000V/1min
  - Wire range: 20−18AWG 1.5mm²
- Mechanical
  - Operating temperature:−40℃∽+105℃
  - Soldering temperature:250℃±5/5sec
  - Strip length: 8−9mm
- RoHS compliance

HOW TO ORDER

KF124B−3.81−XXP−1 X−XXXXX

- KF124B: MODEL
- 3.81: Pitch:mm
- XXP: No.of poles: 2~24P
- 1: 1:Single Pitch, 2:Double Pitch
- X: Color: G:Green, R:Red, K:Black, W:White, O:Orange, B:Blue, GR:Gray
- XXXXX: Customer Request

Pitch range			Nominal dimension range						
>0 ~ 6	>6 ~ 10	>10 ~ 24	>0 ~ 30	>30 ~ 60	>60 ~ 100	>100 ~ 150	>150		0.1/10
±0.15	±0.20	±0.30	±0.30	±0.50	±0.70	±1.00	±1.30		±2°

PROJECTION		TITLE	KF124B−3.81−XXP−1X
UNIT	mm		
SHEET SIZE	A4	SERIES	KF124
DRAWING TYPE	CUSTOMER DRAWING		
SCALE	1:1	SHEET	1 OF 1
DRAWING NO.	W15000232		

® 慈溪市凯峰电子有限公司
CIXI KAIFENG ELECTRONICS CO.,LTD